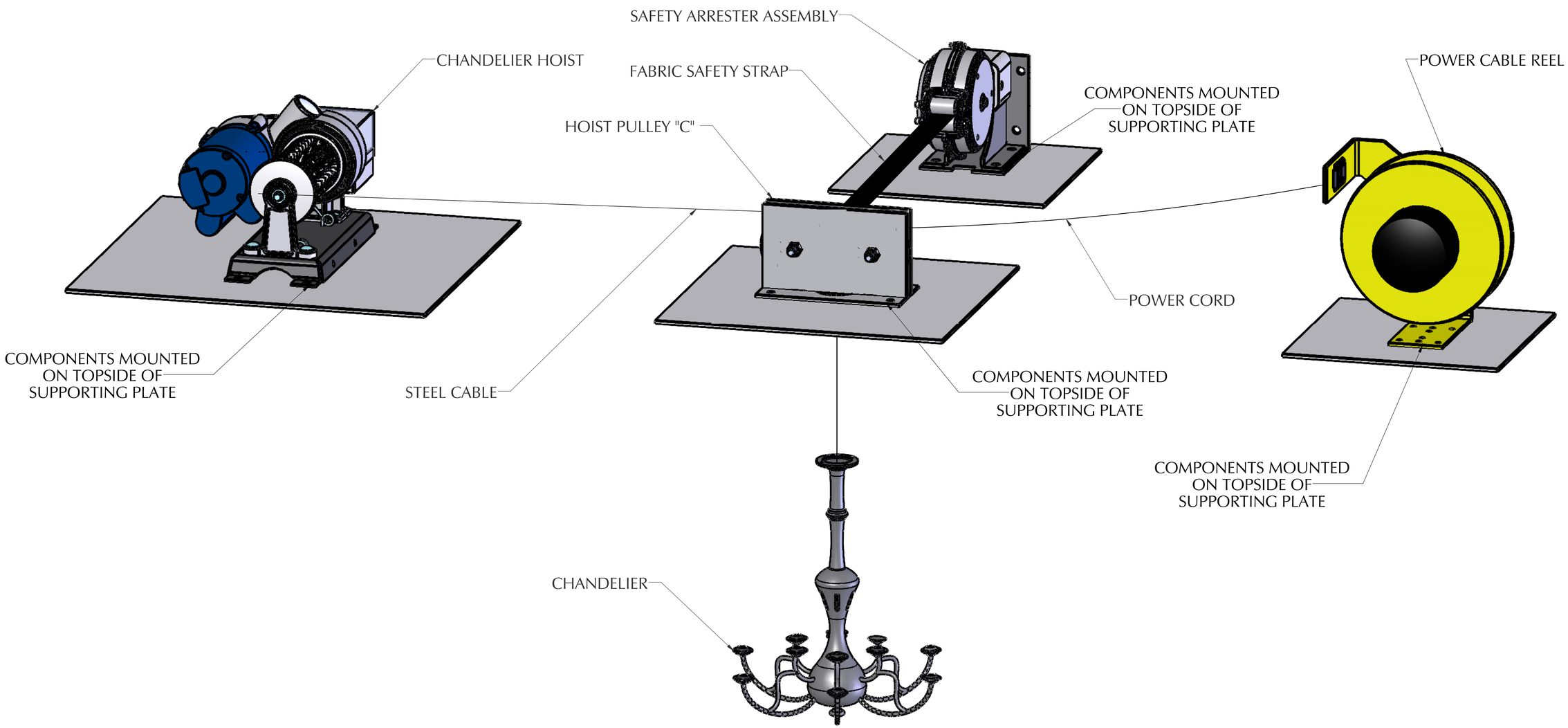CHANDELIER HOIST SYSTEM
CONFIGURATION "C" TOPSIDE MOUNT